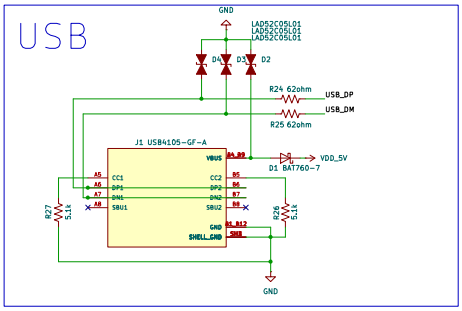
USB
GND
LAD52C05L01
D1
D2
R24 62ohm
R25 62ohm
USB_DP
USB_DM
J1 USB4105-GF-A
VDD_5V
D1 BAT760-7
R27 5.1k
R26 5.1k
GND

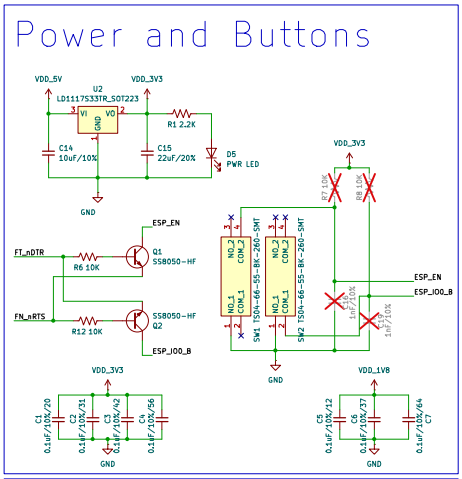
Power and Buttons
VDD_5V
VDD_3V3
U2
LD1117S33TR_SOT223
R1 2.2K
C14 10uF/10%
C15 22uF/20%
D5 PWR LED
GND
ESP_EN
FT_nDTR
R6 10K
Q1 SS8050-HF
FN_nRTS
R12 10K
Q2 SS8050-HF
ESP_IO0_B
SW1 TSDH-66-55-BK-260-SMT
SW2 TSDH-66-55-BK-260-SMT
R7 10K
R8 10K
1nF/10%
VDD_1V8
C1 0.1uF/10%/20
C2 0.1uF/10%/31
C3 0.1uF/10%/42
C4 0.1uF/10%/56
C5 0.1uF/10%/12
C6 0.1uF/10%/37
C7 0.1uF/10%/64

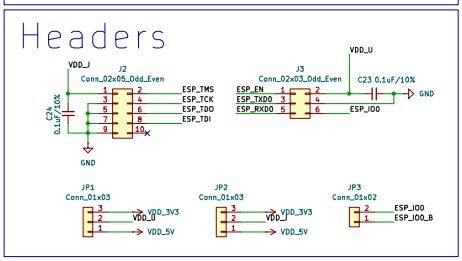
Headers
VDD_J
J2
Conn_02x05_Odd_Even
C24 0.1uF/10%
ESP_TMS
ESP_TCK
ESP_TDO
ESP_TDI
J3
Conn_02x03_Odd_Even
VDD_U
C23 0.1uF/10%
ESP_EN
ESP_TXD0
ESP_RXD0
ESP_IO0
JP1
Conn_01x03
JP2
Conn_01x03
JP3
Conn_01x02
VDD_3V3
VDD_5V

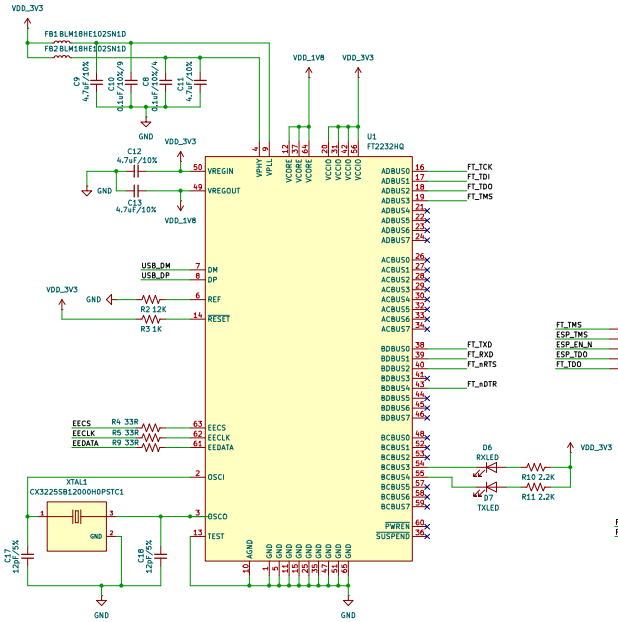
VDD_3V3
FB1 BLM18HE102SN1D
FB2 BLM18HE102SN1D
C9 4.7uF/10%
C10 0.1uF/10%/9
C11 4.7uF/10%
VDD_1V8
U1
FT232HQ
C12 4.7uF/10%
C13 4.7uF/10%
VREGIN
VREGOUT
USB_DM
USB_DP
DM
DP
REF
RESET
R2 12K
R3 1K
EECS
EECLK
EEDATA
R4 33R
R5 33R
R9 33R
OSCI
OSCO
TEST
XTAL1
CX3225SB12000H0PSTC1
C17 12pF/5%
C18 12pF/5%
FT_TCK
FT_TDI
FT_TDO
FT_TMS
FT_TXD
FT_RXD
FT_RTS
FT_nDTR
PWREN
SUSPEND
D6 RXLED
D7 TXLED
R10 2.2K
R11 2.2K

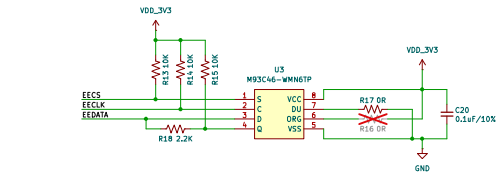
VDD_3V3
R13 10K
R14 10K
R15 10K
U3
M93C46-WMN6TP
EECS
EECLK
EEDATA
R18 2.2K
R17 0R
R16 0R
C20 0.1uF/10%
GND

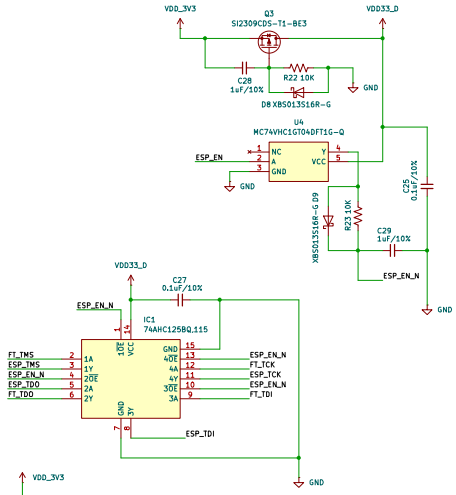
VDD_3V3
VDD33_D
Q3
SI2309CDS-T1-BE3
C28 1uF/10%
R22 10K
D8 XBS013S16R-G
U4
MC74VHC1GT04DFT1G-Q
ESP_EN
C25 0.1uF/10%
R23 10K
C29 1uF/10%
ESP_EN_N
GND
C27 0.1uF/10%
IC1
74AHC125BQ.115
FT_TMS
ESP_TMS
ESP_EN_N
ESP_TDO
FT_TDO
ESP_TCK
FT_TCK
ESP_TDI
FT_TDI
FT_TXD
FT_RXD
R20 0R
R21 0R
ESP_RXD0
ESP_TXD0